1. Draw an free body diagram of member ABD. Solve for support reactions at A and the tension in cable BC.

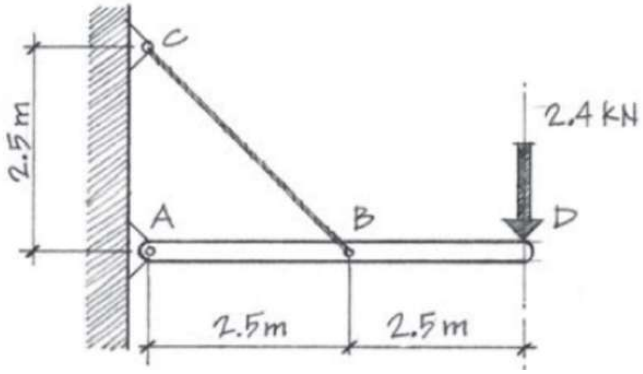
C
2.5 m
2.4 kN
A
B
D
2.5m
2.5m

Solved by Civil Thinking (https://civilthinking.com)

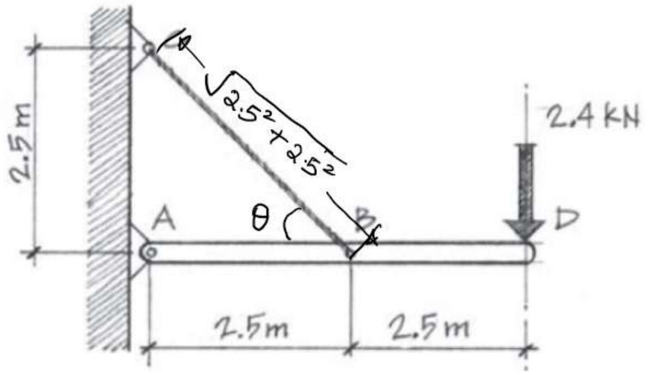
2.5 m
$\sqrt{2.5^2+2.5^2}$
2.4 kN
A
θ
B
D
2.5m
2.5m

$$\sin\theta = \frac{2.5m}{\sqrt{2.5^2+2.5^2}} \; ; \; \cos\theta = \frac{2.5m}{\sqrt{2.5^2+2.5^2}}$$

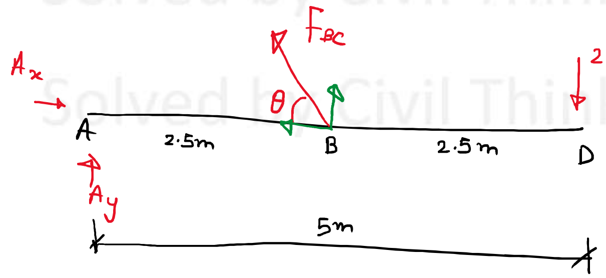
F_{BC}
A_x
θ
2.4KN
A
2.5m
B
2.5m
D
A_y
5m

$\circlearrowleft + M_A = 0:$

$$(2.4\,KN \times 5m) - F_{BC}\sin\theta \times 2.5m = 0$$

$$\Rightarrow F_{BC}\sin\theta \times 2.5m = 2.4\,KN \times 5m$$

$$\Rightarrow F_{BC} = \frac{2.4\,KN \times 5m}{2.5 \times \sin\theta}$$

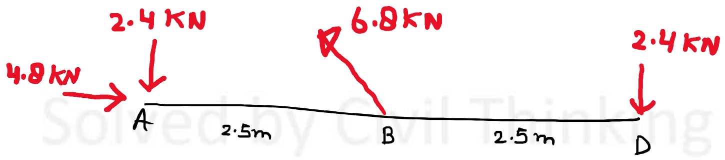
2.4KN
6.8KN
2.4KN
4.8KN
A
2.5m
B
2.5m
D

$$\Rightarrow F_{BC} = \frac{2.4 \times 5}{\frac{2.5 \times 2.5}{\sqrt{2.5^2+2.5^2}}} = \frac{2.4 \times 5 \times \sqrt{2.5^2+2.5^2}}{2.5 \times 2.5}$$

Solved by Civil Thinking (https://civilthinking.com)

$$\frac{\times 2.5}{\sqrt{2.5^2+2.5^2}} \qquad 2.5 \times 2.5$$

$$\Rightarrow F_{BC} = 6.8\ \text{kN}$$

$$+\uparrow \Sigma F_y = 0:$$

$$F_{BC}\sin\theta + A_y - 2.4\ \text{kN} = 0$$

$$\Rightarrow 6.8\ \text{kN} \times \frac{2.5\ \text{m}}{\sqrt{2.5^2+2.5^2}} + A_y - 2.4\ \text{kN} = 0$$

$$\Rightarrow A_y = 2.4\ \text{kN} - 6.8 \times \frac{2.5}{\sqrt{2.5^2+2.5^2}} = -2.4\ \text{kN}$$

$$\Rightarrow A_y = -2.4\ \text{kN}$$

$$\overset{+}{\rightarrow} \Sigma F_x = 0:$$

$$A_x - F_{BC}\cos\theta = 0$$

$$\Rightarrow A_x = F_{BC}\cos\theta = 6.8 \times \frac{2.5}{\sqrt{2.5^2+2.5^2}} = 4.8\ \text{kN}$$

$$\Rightarrow A_x = 4.8\ \text{kN}$$

This problem was solved by Civil Thinking (https://civilthinking.com) If you need solutions of **Strength of Materials/ Mechanics of Materials Questions** or any other **Civil Engineering** subjects, contact us at: **solutions@civilthinking.com** Or submit your problem directly here: 🔗 https://civilthinking.com/getproblemsolutions **Other Subjects We Cover:** ☑ Structural Analysis ☑ Fluid Mechanics ☑ Geotechnical Engineering	**NOTE:** The solution provided in this document is the intellectual property of Civil Thinking (https://civilthinking.com) and is protected by copyright. Any reproduction, distribution, or publication of this content, in whole or in part, is strictly prohibited without prior written permission from https://civilthinking.com.

☑ Transportation Engineering ☑ Construction Management ☑ Finite Element Analysis (FEA), etc. ☑ Engineering Software (ANSYS, ETABS, MATLAB, Revit, SAP2000, AutoCAD, Staad Foundation Advanced, Staad.Pro, etc.) Let us help you solve your engineering challenges! 🚀	