Find Truss Member Forces using Method of Joints

Using the method of joints, determine the force in each member of the truss shown in the drawings below. Summarize the results on a force summation diagram, and indicate whether each member is in tension or compression

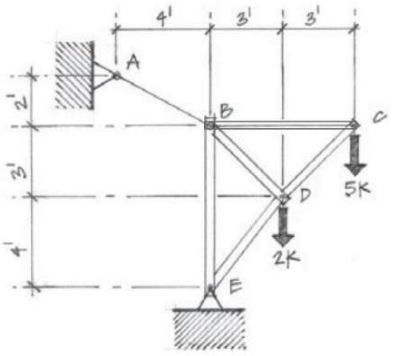

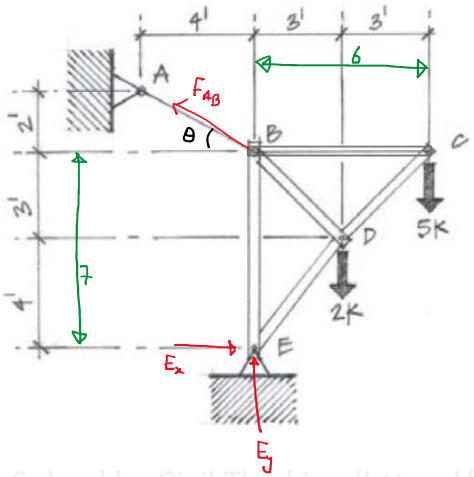

$\circlearrowleft + \Sigma M_E = 0$:

$(5K \times 6) - (F_{AB}\cos\theta \times 7) + (2K \times 3) = 0 \Rightarrow F_{AB} = 5.75\ K$

$+\uparrow \Sigma F_y = 0$:

$E_y + \underbrace{F_{AB}}_{5.75K}\sin\theta - 2K - 5K = 0 \Rightarrow E_y = 4.43K$ ($\sin\theta = 1/\sqrt{5}$)

$\xrightarrow{+} \Sigma F_x = 0$:

$E_x - \underbrace{F_{AB}}_{5.75K}\underbrace{\cos\theta}_{2/\sqrt{5}} = 0 \Rightarrow E_x = 5.75K \times \frac{2}{\sqrt{5}} = 5.143K \Rightarrow E_x = 5.143K$

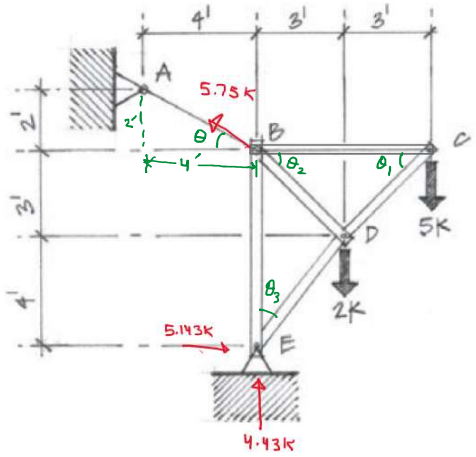

$\theta_1 = \tan^{-1}\frac{3}{3} = 45°$

$\theta = \tan^{-1}\frac{2}{4} = 26.565°$

$\theta_2 = \tan^{-1}\frac{3}{3} = 45°$

$\theta_3 = \tan^{-1}\frac{3}{4} = 36.87°$

Joint C :

Joint C :

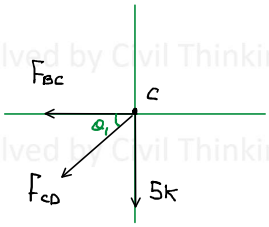

$+\uparrow \Sigma F_y = 0$:

$$-5K - F_{CD} \sin\underset{\uparrow}{\overset{45^\circ}{\theta_1}} = 0 \Rightarrow F_{CD} = -5\sqrt{2}\ K$$

$\overset{+}{\rightarrow} \Sigma F_x = 0$:

$$-F_{BC} - F_{CD} \cos 45^\circ = 0 \Rightarrow F_{BC} = 5K$$

Joint B :

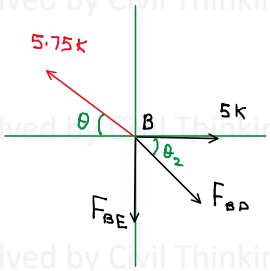

$\overset{+}{\rightarrow} \Sigma F_x = 0$:

$$F_{BD} \cos\underset{45^\circ}{\theta_2} + 5K - 5.75K \cos\underset{26.565^\circ}{\theta} = 0 \Rightarrow F_{BD} = 0.202\ K$$

$+\uparrow \Sigma F_y = 0$:

$$5.75K \sin\underset{26.565^\circ}{\theta} - F_{BE} - \underset{0.202K}{F_{BD}} \sin\underset{45^\circ}{\theta_2} = 0 \Rightarrow F_{BE} = 2.43K$$

Joint E :

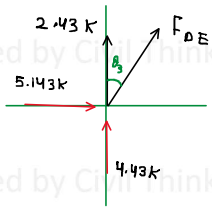

$\overset{+}{\rightarrow} \Sigma F_x = 0$:

$$F_{DE} \sin\underset{36.87^\circ}{\theta_3} + 5.143K = 0 \Rightarrow F_{DE} = -8.57K$$

Cross check :

$+\uparrow \Sigma F_y = 0$:

$$4.43K + 2.43K + F_{DE} \cos\underset{36.87^\circ}{\theta_3} = 0 \Rightarrow F_{DE} = -8.57K$$

Both $\Sigma F_x = 0$ and $\Sigma F_y = 0$ provided same answer to F_{DE} => Passed ✓

Summary :

Solved by Civil Thinking (https://civilthinking.com)

Solved by Civil Thinking (https://civilthinking.com)

Summary:

$F_{CD} = 5\sqrt{2}\ K\ (C)$

$F_{BC} = 5K\ (T)$

$F_{BD} = 0.202\ K\ (T)$

$F_{BE} = 2.43K\ (T)$

$F_{DE} = 8.57K\ (C)$

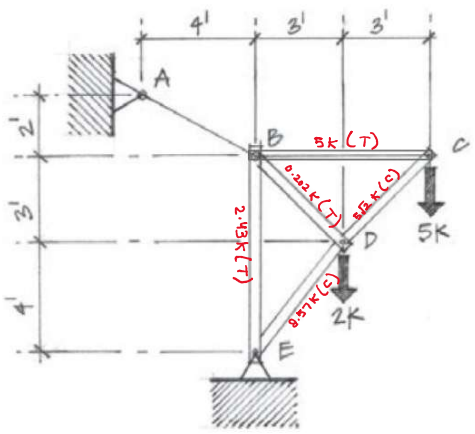

This problem was solved by Civil Thinking (https://civilthinking.com) If you need solutions of **Strength of Materials/ Mechanics of Materials Questions** or any other **Civil Engineering** subjects, contact us at: **solutions@civilthinking.com** Or submit your problem directly here: https://civilthinking.com/getproblemsolutions **Other Subjects We Cover:** ☑ Structural Analysis ☑ Fluid Mechanics ☑ Geotechnical Engineering ☑ Transportation Engineering ☑ Construction Management ☑ Finite Element Analysis (FEA), etc. ☑ Engineering Software (ANSYS, ETABS, MATLAB, Revit, SAP2000, AutoCAD, Staad Foundation Advanced, Staad.Pro, etc.) Let us help you solve your engineering challenges!	**NOTE:** The solution provided in this document is the intellectual property of Civil Thinking (https://civilthinking.com) and is protected by copyright. Any reproduction, distribution, or publication of this content, in whole or in part, is strictly prohibited without prior written permission from https://civilthinking.com.